Improvement the Performance of Hydraulic Proportional Control Valve

Maher Yahya Salloom

Abstract**—**Hydraulic control system utilizes proportional valve to make a précises operations. Proportional directional control valves work as flow control and direction, but the flow control operate on two ways in and out. This paper proposed new modification to make the proportional valve working as flow control in one way only, either meter in or meter out. To prove that the suggestion arrange is proposed. This arrange is simulated. As a results the improvement of proportional is done. The outcome of this work is to consider new type of valve may designed to do better performance.

Keywords- proportional valve, directional valve, meter in, meter out, overrunning load, resistive load.

I. Introduction

DIRECTLY operated 4/3 proportional directional control valves are available in nominal sizes 6 and 10 as shown in figure 1. To adjust the oil flow rate, a setpoint is set in the valve electronics. Based on the polarity and magnitude of this setpoint, the electronics control the solenoid coil "a" or "b" with the appropriate amount of magnetic force. The proportional solenoid converts the current to a mechanical force, with which an armature plunger acts on a spool to push against the spring. If the magnetic force and the spring force are the same, this produces a spool position in conformity with the spring characteristic curve. If the drop in pressure is minimal (< 30 bar) the throttling function takes effect, if the pressure drop is greater, the operating limits must be observed.

The pressure drop at the valve is reliably limited by the use of an external pressure compensator with shuttle valve. All proportional valve spools can meter fluid in and out.[1-2]. Many researches study about proportional control valve and simulation the systems such as V. Stanislav and K. Jiri [3], L. Matti and V. Matti [4], N. Chen [5], J. M. Lee at al [6] and W. Kim, D. Won and C. C. Chung [7]. This work is very important to solve some problems in proportional and to improve the performance. In this work proposal of improvement of performance was presented.

Maher Yahya Salloom is a faculty member of Mecahtronics Engineering Department- Al Khwarizmi College of Engineering- University of Baghdad (phone: +96479013097; e-mail: alabasy2001@yahoo.com).

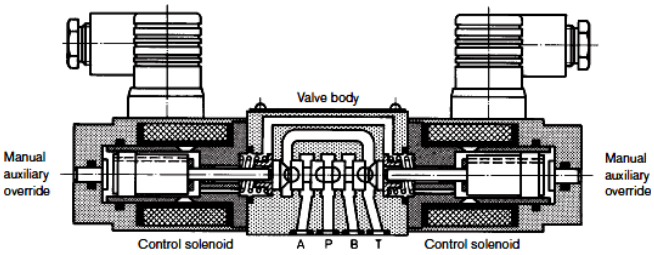

Fig1 Cross Section of Size 6 Proportional Directional Valve

II. Theory Background

The following discussion relates to two main types of proportional valves: those with spool area ratios of 2:1 and 1:1 and their effects on overrunning loads and resistive loads. From this in formation an accurate analogy can be made to select the proper valve for the application. This is the final design step when considering proportional valve, regardless whether the natural frequency was calculated or estimated.

The following step-by-step calculations show how the equations were derived. These equations, are tabulated at the end of this chapter for easy reference. Figure 2 shows basic circuit of proportional directional valve with actuator (hydraulic cylinder).

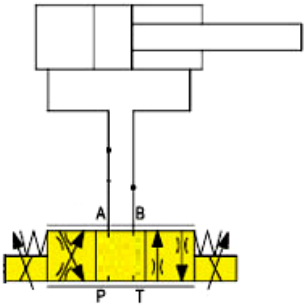

Fig 2 Basic Circuit for Proportional Valve with Cylinder

A. Overrunning Loads

Systems requiring cylinders with 2:1 area ratios should also be equipped with valves that have 2:1 area ratio spools. It was mentioned that a 2:1 area ratio spool is machined to provide half the now area on one land as compared to the other. To further clarify this point, le t us view mathematically why a valve with a spool with a 2:1 area ratio should be used with a cylinder which has a 2:1 area ratio.

All proportional valve spools can meter fluid in and out. Because of this orifice function, the equation for flow through

an orifice applies: [2]

$$Q = C\ A \sqrt{\Delta P} \qquad (1)$$

Q = flow across the orifice, L/min
C = discharge coefficient
a = area of orifice, mm^2
ΔP = pressure drop across the orifice, bar

At first glance, it may seem that extensive calculations would be needed to determine the pressure drop across orifices ΔP_1 and ΔP_2 Figure 3. However, considering the load conditions of the system, these calculations actually become quite simple.

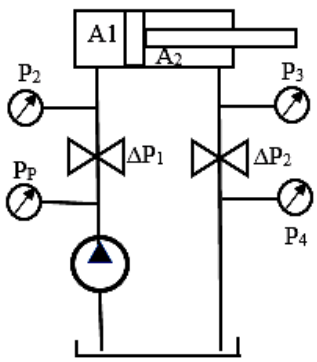

Fig 3 Basic Circuit for Calculating Pressure Drops With Overrunning Type Loads

The first condition that can be satisfied is the orifice equation. This will first be done for a 2:1 area ratio spool, then for a 1:1 area ratio spool to show the adverse effects they cause when used with 2:1 area ratio cylinders.

For a 2:1 area ratio cylinder controlled by a valve with a 2:1 area ratio spool, Figure 2.

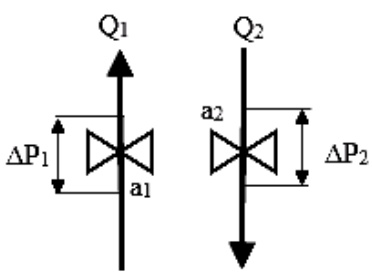

Fig 2 The Orifice Analysis

$$Q_1 = 2\ Q_2$$

$$a_1 = 2\ a_2$$

Since there are two orifices:

$$Q_1 = C\ a_1 \sqrt{\Delta P_1}$$

$$Q_2 = C\ a_2 \sqrt{\Delta P_2}$$

Setting these equations equal to each other:

$$a_2 = a_1 / 2$$

Therefore,

$$Q_1 / 2\ Q_2 = \sqrt{\Delta P_2} / \sqrt{\Delta P_1}$$

Thus,

$$\Delta P_2 \approx \Delta P_1$$

The pressure drop will be fairly equal on both sides of the valve, providing good controllability for 2:1 area ratio cylinders. However, for cylinders with 2:1 area ratios controlled by valves with 1:1 area.

$$a_2 = (Q_2 / \sqrt{\Delta P_2}) \text{ and } a_1 = (Q_1 / \sqrt{\Delta P_1})$$

Thus,

$$Q_2 / \sqrt{\Delta P_2} = Q_1 / \sqrt{\Delta P_1}$$

$$4\Delta P_2 = \Delta P_1$$

When using a 2:1 area ratio cylinder with a 1:1 area ratio spool, ΔP_1, is four times greater than ΔP_2, This can cause substantial problems if the required backpressure on the head end of the cylinder must exceed 1/4 system pressure. A vacuum can be created because the cap end of the cylinder will not completely fill with oil. To study this condition in more detail, let's consider a situation with a 400 kgf overrunning load, a 1:1 area ratio spool, and a 2:1 area ratio cylinder, as shown in Figure 4. This relates directly to the method used to determine the pressure drop across the valve.

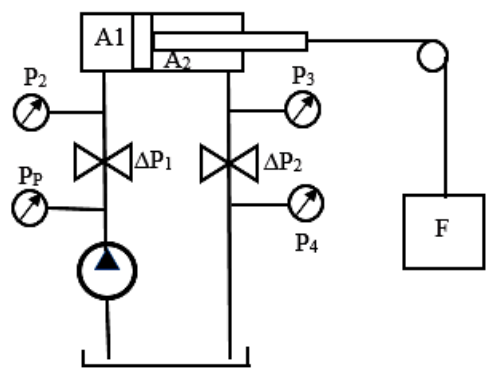

Fig 4 Overrunning System

By summing forces, we solve for P_3

$P_3 = (P2\ A_1 + F) / A_2$

Then can determine:

$\Delta P_1 = P_p - P_2$

$\Delta P_2 = P_3 - P_4$; assuming that $P_4 = 0$,

$\Delta P_2 = P_3$

Determined previously for 1:1 area ratio spools. Squaring both sides:

$Q_1 / Q_2 = \sqrt{\Delta P_1} / \sqrt{\Delta P_2}$ or $(Q_1 / Q_2)^2 = (\sqrt{\Delta P_1})^2 / (\sqrt{\Delta P_2})^2$

$= (Q_1)^2 / (Q_2)^2 = \Delta P_1 / \Delta P_2$

$\therefore \Delta P_2 = [(Q_2)^2 \bullet \Delta P_1] / (Q_1)^2$

Substituting:

$P_3 = [(Q_2)^2 \bullet (P_p - P_2)] / (Q_1)^2$

$(P_p - P_2)(Q_2)^2 / (Q_1)^2 = (P_2 A_1 + F) / A_2$

Solving for P_2:

$P_2 = [P_p (Q_2 / Q_1)^2 - (F / A_2)] / [(A_1 / A_2) + (Q_2 / Q_1)^2]$

By applying the parameters F = 400 kgf, Pp = pump pressure = 100 bar, A1 = 20 cm^2, A_2 = 10 cm^2 and Q = 110 L/min

P_2 = -6.66 bar

When P_2 is less than zero psi, a vacuum is created.

$\therefore \Delta P_1 = P_p - P_2$

$= 100$ bar - (-6.66 bar) = 106.66 bar ?

Since 100 bar is max. ΔP_1 ;

$\therefore \Delta P_2 = \Delta P_1 / 4 = 100 / 4 = 25$ bar

A pressure drop of 25 bar across area a_2, is not enough. In other words, a smaller orifice ·is needed to create enough backpressure on the head end of the cylinder to keep the load from overrunning and causing a vacuum.

Let now to consider the same condition with a 2:1 area ratio spool.

From the orifice calculation completed previously for a 2:1 area ratio:

$2Q_2 / \sqrt{\Delta P_2} = Q_1 / \sqrt{\Delta P_1}$

Thus,

$\Delta P_1 / \Delta P_2 = (2 Q_2)^2 / (Q_1)^2$

$\Delta P_2 = (2 Q_2)^2 \bullet \Delta P_1 / (Q_1)^2$

Substituting:

$P_3 = [(2Q_2)^2 \bullet (P_p - P_2) / (Q_1)^2]$

Substituting again:

$[(P_p - P_2)(2Q_2)^2 / (Q_1)^2] = [(P_2 \bullet A_1) + F] / A_2$

Thus,

$P_2 = [P_p (2Q_2 / Q_1)^2 - (F / A_2)] / [(A_1 / A_2) + (2Q_2 / Q_1)^2]$

= 26.6 bar

This cylinder will not draw a vacuum. Therefore,

$\therefore \Delta P_1 = P_p - P_2$ = 100 bar - 26.6 bar = 73.4 bar ?

Since $\Delta P_2 = P_3$, and P_3 is known,

P_3 = 93.2 bar

ΔP_2 = 137 bar

ΔP_t = 230.2 bar

The valve could now keep the load from overrunning and the system from pulling a vacuum. However, with a total pressure drop a cross the valve of 230.2 bar, spool stroke would still have to be limited considerably. (Refer to the performance curves for the valve.) At 70% control current, the total pressure drop across the valve is 100 bar, Figure 5; the calculated pressure drop was 230.2 bar. This means that to obtain the 113.4 L/min flow required at a total pressure drop of 230.2 bar, control current would have to be limited more than 70%. Because a small orifice is required at this considerably high pressure differential, very little of the spool stroke would be used.

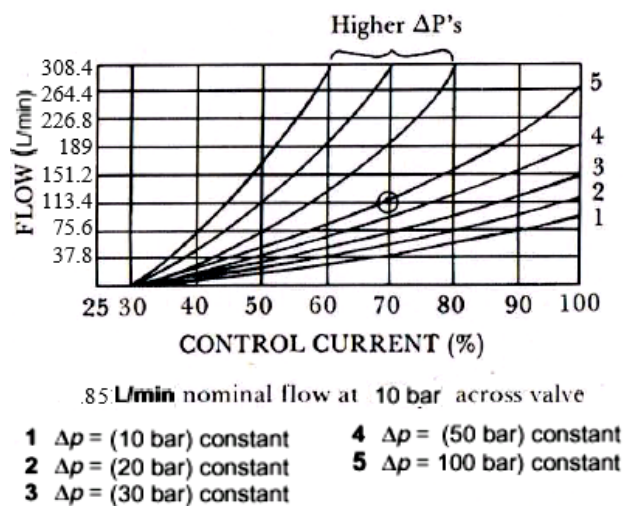

Fig 5 Performance Curves for Valve [8]

In addition, the performance of the valve at this high pressure differential will be poorer than in the range of 100 bar and below at the required flow rate. The load should be counterbalanced.

B. Resistive Loads

Now that the condition s for 1:1 and 2:1 area ratio valve spools have been satisfied for overrunning loads, let us consider how 1:1 and 2:1 area ratio valve affect a resistive load, Figure 6.

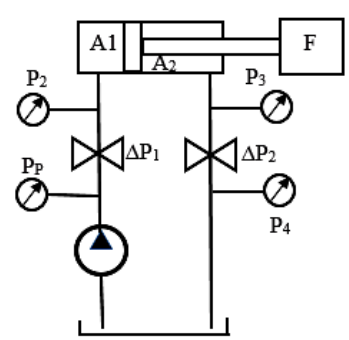

Fig 6 Resistive System

By summing forces, we can solve for P2:

$P_2 = [(P_3 \bullet A_2) + F] / A_1$

For a 1:1 area ratio valve:

$\Delta P_1 = (Q_1/Q_2)^2 \bullet \Delta P_2$

$\Delta P_1 = Pp\text{-}P$; $\Delta P_2 = P_3 - P4$ assuming that $P_4 = 0$,

Substituting:

$P_p - P_2 = (Q_1/Q_2)^2 \bullet P^3$

$P_p - (Q_1/Q_2)^2 \bullet P_3 = [F + (P_3 \bullet A_2)] / A_1$

Thus,

$P_3 = [P_p - (F/A_1)] / (Q_1/Q_2)^2 + (A_2/A_1)]$

For 2:1 area ratio valve resistive load:

$P_3 = [P_p - (F/A_1)] / [(Q_1/2 \bullet Q_2)^2 + (A_2/A_1)]$

Using the same parameters as before for a 2:1 area ratio valve with a resistive load:

$P_3 = 80.5$ bar

But, since $\Delta P_2 = P_3 = 80.5$ bar, then

$P_2 = [(P_3 \bullet A_2) + F] / A_1 = 60.25$ bar

Therefore,

$\Delta P_1 = P_p - P_2 = 100 - 60.25 = 39.75$ bar

$\Delta P_t = \Delta P_1 + \Delta P_2 = 39.75 + 80.5 = 120.25$ bar

The total pressure drop across the valve is 120.25 bar. To obtain this pressure drop and use the maximum possible spool stroke, the required spool would have to be selected from the operating curves.

However, a 2:1 area ratio spool is available only at its highest nominal now rating for each valve size; therefore, in some cases, it may not be possible to use full spool stroke. This is especially true in the case of 2:1 area ratio cylinders and 2:1 area ratio spools.

C.Meter In And Meter Out Of Hydraulic Actuators

A meter-in circuit is ideal in applications where a load always offers a positive resistance (resistive load) to flow during a controlled stroke as shown in figure 7.

$P1 = P_3 \bullet A_2 / A_1 + F / A_1$

$Pp > P1$

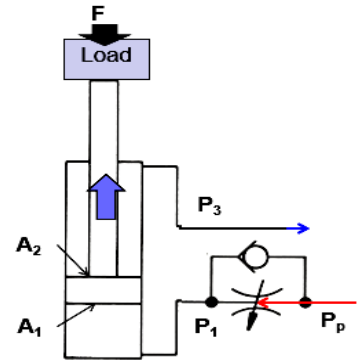

Fig 7 Meter in

This type of circuit is ideal for overhauling (overrunning) load applications in which a workload tends to pull an operating piston faster than a pump's delivery would warrant as shown in figure 8.

$P_3 = P_p \bullet A_1/A_2 + F / A_2$

$P_3 > P_4$

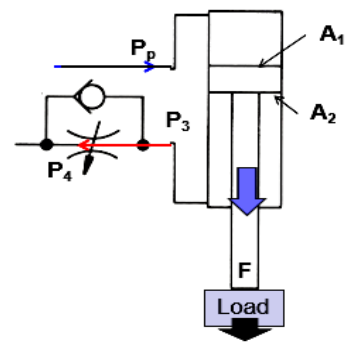

Fig 8 Meter out

III. The Improvement

As previous, proportional directional control valve is working as meter in and meter out in the same time. This operation causes high pressure drop across the valve. The better working is either meter in or meter out depend on the application. To modify the proportional directional control valve, proposed new arrange to make the valve operate either meter in or meter out. The modification is add two 3/2 pilot operated directional control valve. The meter in arrange is shown in figure 9 and meter out is shown in figure 10. The 3/2 pilot operated directional allows the flow go directly to tank when it used as meter in while proportional directional control valve controls the pressure line that is going to actuator. The pressure line can be controlled through the 3/2 pilot operated directional which allows the flow go directly to actuator when it used as meter in while proportional directional control valve controls the pressure line that is going to tank.[9-10]

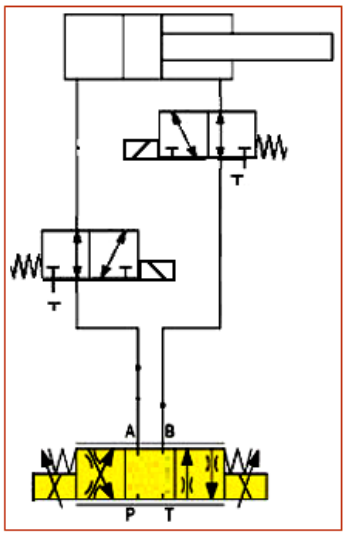

Fig 9 Modification as Meter in

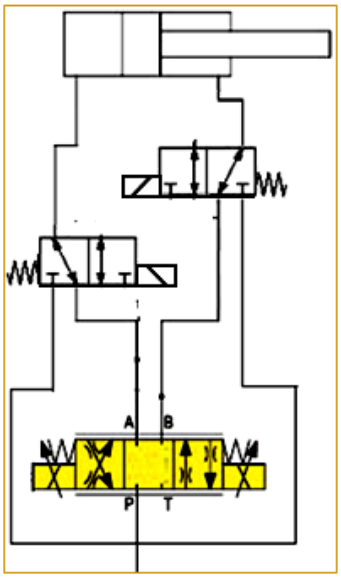

Fig 10 Modification as Meter out only

IV. Results And Discussion

As the result, four simulations test were done using simulation software. Two of them were done before modification one for overrunning load and the other for resistive load. The two other simulation is after medication also one for overrunning load and the other for resistive load.

By applying the parameters F = 400 kgf, Pp = pump pressure = 100 bar, A1 = 20 cm^2, A_2 = 10 cm^2 and Q = 110 L/min.

Figures 11 and 12 shows the relation of pressure with stroke of actuator for resistive load. Figure 11 shows the pressure at piston side about 28 bar. This pressure is after valve. The pressure drop will be 72 bar. Figure 12 shows the pressure at rod side is 20 bar that mean the total pressure drop across the valve will be 92 bar.

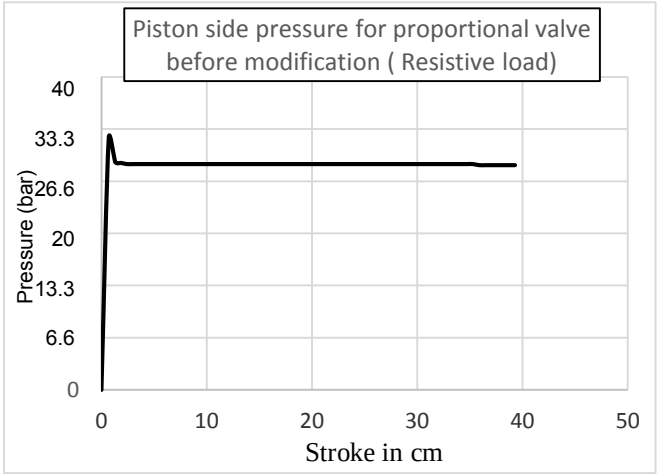

Fig 11 Piston Side Pressure for Resistive Load before Modification

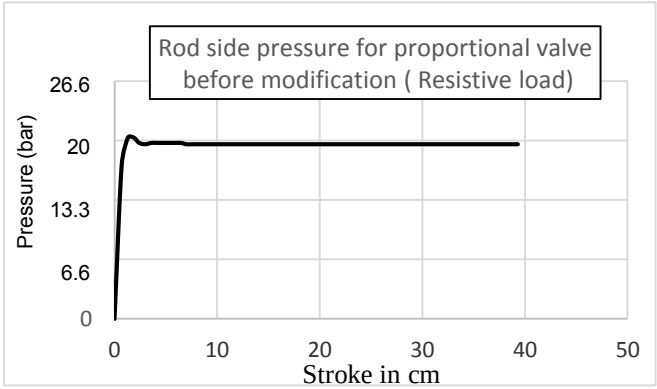

Fig 12 Rod Side Pressure For Resistive Load before Modification

Figures 13 and 14 shows the relation of pressure with stroke of actuator for overrunning load. Figure 13 shows the pressure at piston side about 12.5 bar, sometime vacuum is occur. This pressure is after valve. The pressure drop will be 87.5 bar. Figure 14 shows the pressure at rod side is 25 bar that mean the total pressure drop across the valve will be 112.5 bar.

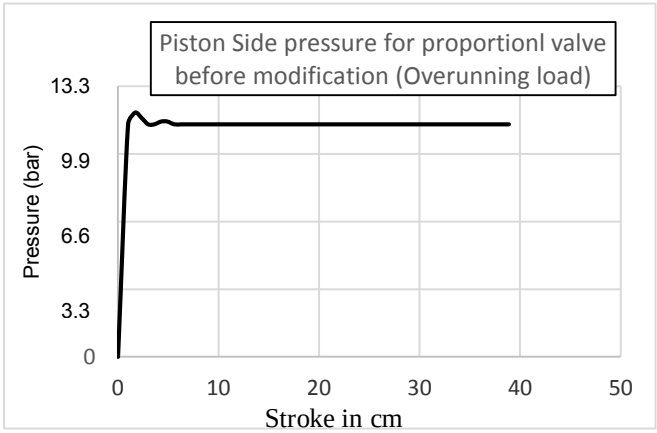

Fig 13 Piston Side Pressure for Overrunning Load before Modification

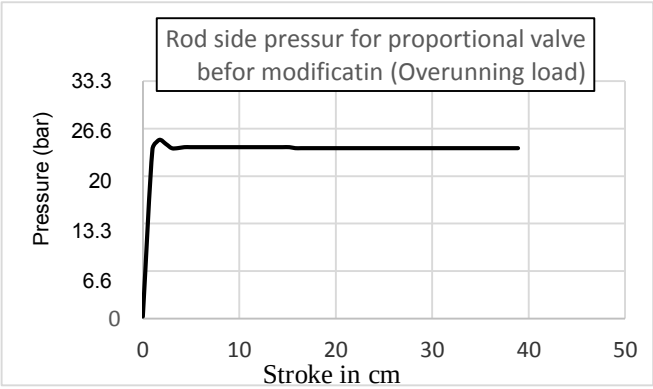

Fig 14 Rod Side Pressure for Overrunning Load before Modification

Figures 15 and 16 shows the relation of pressure with stroke of actuator under meter in application (Resistive load). Figure 15 shows the pressure at piston side about 20 bar, that mean the total pressure drop across the valve just only 20 bar. Figure 16 shows the pressure at rod side is 0.3 bar.

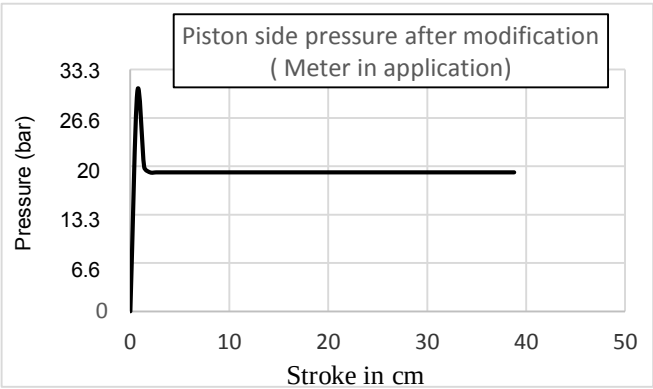

Fig 15 Piston Side Pressure for Meter in Application after Modification

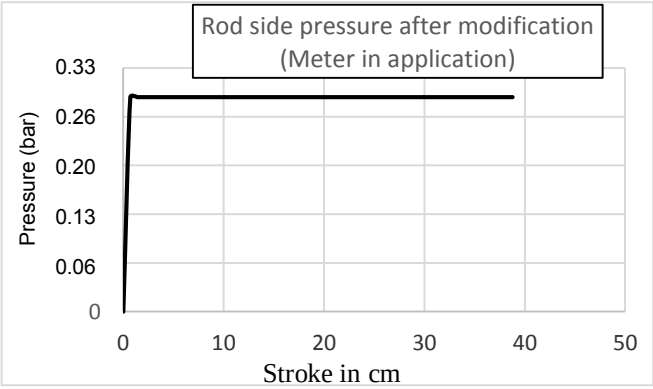

Fig 16 Rod Side Pressure for Meter in Application after Modification

Figures 17 and 18 shows the relation of pressure with stroke of actuator under meter out application (overrunning load). Figure 17 shows the pressure at piston side about 98 bar. This pressure after valve. The pressure drop will be 2 bar this is total pressure drop across the valve. High pressure means no vacuum occur. Figure 16 shows the pressure at rod side is 140 bar, that mean the load will be still hold no overrunning occur and no need to smaller orifice.

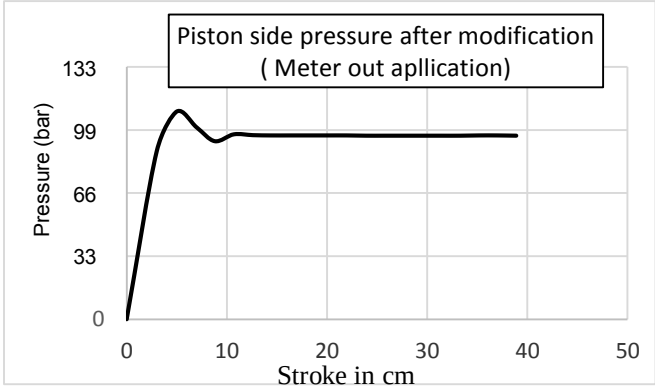

Fig 17 Piston Side Pressure for Meter out Application after Modification

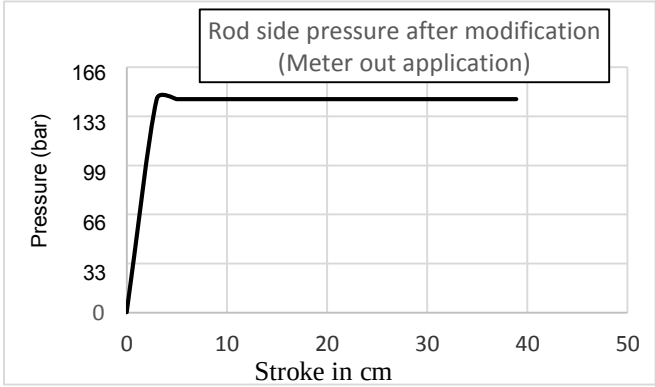

Fig 18 Rod Side Pressure for Meter out Application after Modification

V. Conclusion

As a conclusion the new arrange is a chive the requirement. The performance is improved and will make the better working of proportional directional control valve depend on what type of applications. This work can be made an innovation to redesign new valve.

References

[1] G. Rath and E. Zaev, "*Cylinder Pressures in a Position Controlled System With Separate Meter-in and Meter-out*," The 13th Scandinavian International Conference on Fluid Power, SICFP2013, June 3-5, 2013, Linköping, Sweden,*pp 251-259.*

[2] M. Y. Salloom and R. N. Khaleel "*Stabilizing Gap of Pole Electric Arc Furnace Using Smart Hydraulic System*," Al-Khwarizmi Engineerin Journal Vol. 11, No. 1, 2015, PP 11-18

[3] V. Stanislav and K. Jiri, "*Hydraulic arm modeling Via matlab simhydraulics*," Engineering MECHANICS, Vol. 16, 2009, No. 4, p. 287–296.

[4] L. Matti and V. Matti, "*Energy-efficient motion control of a digital hydraulic joint actuator*" Proceedings of the 6th JFPS International Symposium on Fluid Power, TSUKUBA 2005 November 7-10, 2005, pp. 640–645.

[5] N. Chen, "*Response Sensitivity of Electro-hydraulic Actuator for Vehicle Engine*" IEEE Vehicle Power and Propulsion Conference (VPPC), September 3-5, 2008, Harbin, China.

[6] J. M. Lee, H. M. Kim, S. H. Park, and J. S. Kim "*A position control of electro-hydraulic actuator systems using the adaptive control scheme*" Proceedings of the 7th Asian Control Conference, Hong Kong, China, August 27-29, 2009 pp 21-26.

[7] W. Kim, D. Won and C. C. Chung, "*High Gain Observer Based Nonlinear Position Control for electro-Hydraulic Servo Systems*" 2010 American Control Conference Marriott Waterfront, Baltimore, MD, USA June 30-July 02, 2010, pp 1440-1446.

[8] Delta p-q curve of an On/Off directional control valve http://forums.hydraulicspneumatics.com/eve/forums/a/tpc/f/8621030121/m/2317025966 [19/07/2015] pm 01:12:5

[9] Using Two 2 Position, 3-Way Proportional Valves for 4-Way Meter-in Control " http://www.sunsales.com.au/announcements/using-two-2-position-3-way-proportional-valves-for-4-way-meter-in-control [19/07/2015] pm 02:24:5

[10] Sun's Proportional Valves Enable Meter-in and Meter-out in Motion Control Circuits http://www.sunhydraulics.com/about/highlights/suns-proportional-valves-enable-meter-and-meter-out-motion-control-circuits-0 [19/07/2015] pm 02:27:0

Maher Yahya Salloom was born in Baghdad on 7 July 1962. He has B.Sc. in Mechanical Engineering 1984, M.Sc. in Applied Mechanics (Hydraulic Control) 1999-College of Engineering, University of Baghdad-IRAQ and PhD in Applied Mechanics (Hydraulic Control) 2011-School of Mechanical Engineering, University Sains Malaysia (USM).

From 1985-1992, he was officer government as mechanical designer for special machines, equipment, and hydraulic control systems. From 1992 to 2001, he worked as head of heavy equipment design department /Mechanical Engineering Design Center. He participated with 50 projects at time ago. He had worked with operation panel for electricity as a panelist (1993 -1995).

Currently, he is a lecturer at Mechatronics Department/ Al-Khwarizmi College of Engineering/ University of Baghdad from 1999 for subjects, CAM systems, Sensors and measurement systems, Theory of machines, PLC and Hydraulic and pneumatic systems.

He had worked as Installation and operation engineer for many type of water treatment plants (50 m^3/h, 200m^3/h and RO -10 m^3/h)/2006 at Kirkuk/IRAQ.

His Specialization are Mechanical engineering design, manufacturing for heavy and special equipment, machine, and hydraulic control systems.

In addition to Mechanical engineering design his Activity experience are Hydraulic control systems (design and manufacturing). Also, he have activity experience with water, environment, sewage treatment (WES).