Performance Analysis of Soft-Decision on Viterbi Decode for Cooperative Relay in LTE-Advanced

Ekkaphot.Meesa-ard and Suwat. Pattaramalai

Abstract-- In this paper, the performance analysis of soft decision on Viterbi decoding for cooperative relay in LTE-Advanced (LTE-A) is proposed. The analysis is based on distributed turbo coding (DTC); rate-compatible puncture convolutional (RCPC) and decode and forward (DF) schemes, deploying on LTE-A relay standard. In simulation, AWGN and Rayleigh fading channels are considered. In addition, the simulated relay networks are the equal-distance delta and the line structures. Delta structure has equal distances between source, relay, and destination, and line structure has the relay located in between source and destination. The performance simulation results show that DTC has the least bit error rate (BER) and DF has the most BER. Considering at 10^{-3} BER, DTC scheme has gain from RCPC approximately 3 dB in AWGN channel and 7 dB in Rayleigh channel. Finally, the delta network structure has better performance than line structure and gain approximately 13 dB in AWGN and 12 dB in Rayleigh at 10^{-3} BER.

Keywords LTE-A, Viterbi decoder, Soft decision, Cooperative relay, DTC, RCPC, DF.

I. Introduction

DEPLOYING relay on the network is an addition feature developed from LTE standard. In LTE-A, the relay can provide most significant to increase the performance of network depend on number of relay and deployment located in the LTE-A network. [1]. Cooperation relay is a new relay method, providing users to utilize system and get higher efficiency. This cooperative relay can divided into three schemes, amplifier and forward (AF), decode and forward (DF) and coded operation (CC). The performance comparison between these three schemes is studied. The high improvement quality can be seen on cooperative schemes that support very good distributed effect for the transmitted symbols [2]. The high improvement quality was implemented on Amplifier and forward (AF) scheme by used MAP soft information combine into turbo code [3]. The DF relay is proved for signal error performance in terms of cooperative diversity and increase efficiency in the detection technique [4]. Coded cooperation (CC) provides both users to utilize system it can be get more improvement and high efficiently. These schemes provide high capacity without extra bandwidth resource consumption [5]. The RCPC is one of code cooperation (CC). This scheme is performed incremental redundancy with the difference without the imposing any overhead on the system. In [6], the simulation results indicate a gain of 1-2 dB at low SNR and also the coverage and robustness of the system are improved. The idea of DTC scheme is the relay which first computes the log-likelihood ratios (LLRs) of bits punctured at the source. Then the relay forwards the hard decided bits (-1 or 1) to the destination. [7].

This research is the performance analysis of three cooperative schemes, distributed turbo code (DTC) and comparing to rate-compatible puncture convolutional (RCPC) and decode and forward (DF), with implementation of soft decision into the relay. This analysis is performing on AWGN and Rayleigh channels. Additional, two relay network structures, delta and line, are simulated to show the effect of relay position.

Ekkaphot.Meesa-ard,is with the Faculty of Engineering, King Mongkut's University of Technology Thonburi,126 Pracha Uthit Rd., Bang Mod, Thung Khru, Bangkok 10140 Thailand (author phone: +668 7774 6888; e-mail: ekkaphot@hotmail.com).

Suwat. Pattaramalai, is with the Faculty of Engineering, King Mongkut's University of Technology Thonburi,126 Pracha Uthit Rd., Bang Mod, Thung Khru, Bangkok 10140 Thailand (corresponding author phone: +662 470 9079; e-mail: suwat.pat@kmutt.ac.th).

II. LTE-A and Cooperative Relay Schemes

A. Turbo encoding

Turbo code is generated by using two recursive systematic convolutional (RSC) codes with parallel concatenation. An RSC encoder typically has r = 1/2 and is used as encoder component. The two component encoders are separated by an interleaver. Only one of the systematic outputs from the two component encoders is used. The turbo encoding is shown in Fig. 1.

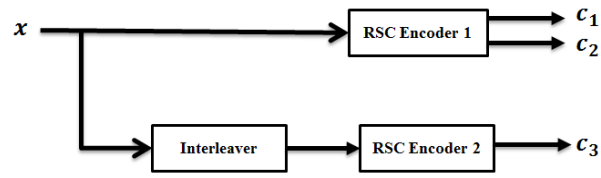

Fig. 1 Turbo encoder fundamental

B. Convolutional codes

Convolutional codes have been developed to channel codes in wireless communication systems. These codes are generated with a separate strong mathematical structure and

using for real time error correction. Convolutional code is converted the entire data stream into one single codeword. The encoded bits depend not only on the current k input bits but also on past input bits. The main decoding strategy of convolutional codes is based on Viterbi algorithm. The convolution encoder in LTE-A is shown as Fig. 2.

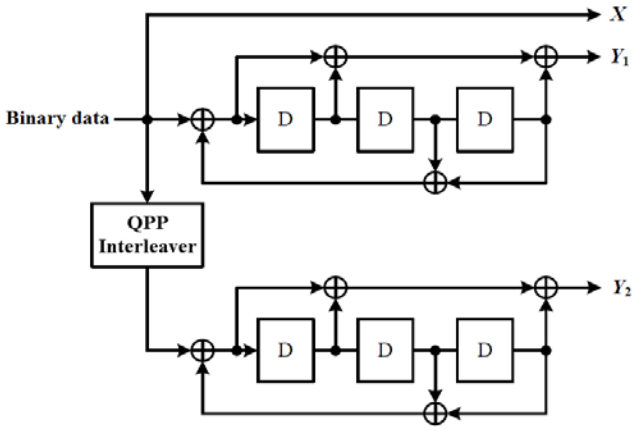

Fig. 2 Convolution encoder in LTE-A

C. Turbo decoder

There are two algorithms for decoding method of turbo codes which can implement by using a maximum a posteriori (MAP) algorithm and a soft output Viterbi algorithm (SOVA). The SOVA is an extension of the Viterbi algorithm that has an implementation advantage over MAP. This simulation used SOVA algorithm to decode convolutional encoded data from turbo encoding.

D. Soft decision on Viterbi algorithm

There is two ways to implement Viterbi algorithm. The first method based on Euclidean distance metric which the received bits using the Euclidean distance metric to process as multi-bit quantization. The second method uses a correlation metric where the receiving bits are also processed as multi-bit quantization. Soft decision can be provided coding gain obtained by depending on the code rate where the coding gain is provided algorithm in order to check error-correcting on channel coding and can be defined as the reduction, which can support the best realizing due to the code. The coded gain depends on the defined code rate, the number of bit per codeword, the minimum distance of the code, and the channel SNR. In soft decision decoding, the decoding is based on the minimum Euclidean distance between the received signal and the signal corresponding to the codeword.

E. Cooperative relay schemes

The cooperative relay can be separate as three schemes in LTE-A which are amplify and forward (AF), Decode and Forward (DF) and Coded Cooperation (CC). The first cooperative is amplify and forward (AF) which is the protocol that not require a complicated decoding and there is no encode and decode method. The received signal from the relay will be expanded before resent again to destination. The interference pattern is also amplified as well and this is a disadvantage for this protocol. Decode and forward (DF) is a relay protocol which the data transmitted from the source is decoded and then retransmit the decoded data to destination. The destination will recognize the channel gain from the source to destination and relay to destination and then performs decode the data from the source. Rate-compatible puncture convolutional (RCPC) is one of coded cooperation scheme. Theoretical bit error probability is deduced over the slow Rayleigh fading channel implemented on the characteristics of RCPC coded cooperation. This scheme is performed incremental redundancy with the difference without impose any overhead on the system. Distribute turbo coded cooperation (DTC) is become the code cooperation technique in many communication channel which require higher throughputs rate. The DTC is the novel technique to enhance the performance of decoding success rate on the relay. There is two ways of constructing a distributed Turbo code. The first way, the source node broadcasts information of Turbo code and the relay node decodes the code and then interleaves with re-encodes the information using a convolutional code. The destination observes the Turbo code consisting of three RSC component codes. Second way, the source node transmits the RSC code and the relay node decodes the code and then interleaves with re-encodes the information using the RSC code. The destination observes a Turbo code consisting of two component codes. The firs method is examined on the performance evaluation in this research.

F. AWGN and Rayleigh fading

The most common transmission errors are caused by AWGN because this type of random noise is unavoidable. AWGN is assumed to be independent from each other. Rayleigh fading is caused by multipath reception. The mobile antenna receives a large number, say *N*, reflected and scattered waves. Because of wave cancellation effects, the instantaneous received power seen by a moving antenna becomes a random variable, dependent on the location of the antenna.

III. THE SYSTEM MODEL

In this research, cooperative relay schemes wireless network environment is consists of one source, one relay and one destination as shown in Fig. 3.

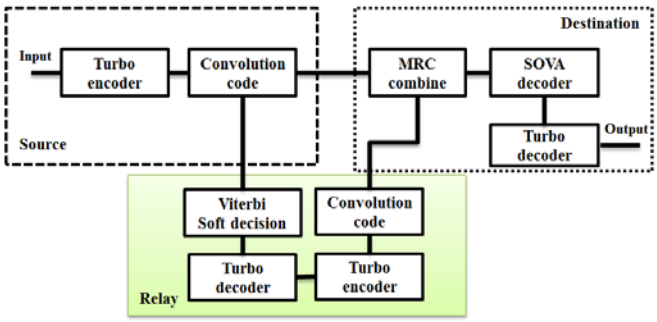

Fig. 3 the system model implements soft decision on DTC

Each node can transmit or receive data. The source transmits the code word partitioning as two parts. The first part, the source transmits data codeword to the relay and destination at the same time. The relay received data and using the soft decision decoding data from the source. Then the relay

will produce encoding data again before retransmit it. At the destination, the receiving codeword is combined by maximum ratio combining (MRC) and decoded by using soft output Viterbi algorithm (SOVA) and turbo decoder.

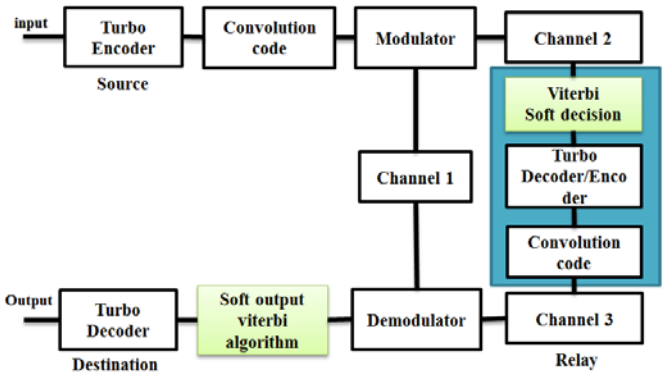

Fig. 4 the simulation block diagram soft decision on DTC

The block diagram of the simulation for DTC scheme is shown in Fig. 4. This scheme is initial from turbo source input is generated and then do the parallel concatenation between turbo and convolution codes. The benefit of implementing serial and parallel concatenation schemes is that it often used between the encoders to improve burst error correction capacity or to increase the randomness of the code. The standard turbo code encoder rate is 1/3. The parallel concatenated recursive systematic convolution (RSC) encoder is established then the two parity of the stream for two RSC encoders is converted into one stream by using superposition and puncturing method. Finally, the turbo code decoder is an iterative serial concatenation of two soft output Viterbi algorithm (SOVA) decoders.

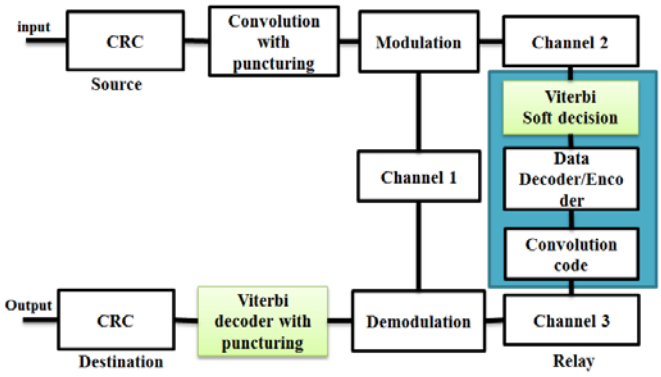

Fig. 5 the simulation block diagram soft decision on RCPC

The Fig. 5 shows the simulation block diagram with RCPC scheme. Before convolution encoder, there is the method to check the CRC for making sure that bit is reliability in previous encoder and decoder. The addition function of this scheme is CRC check and convolution coding with puncturing enable on this schemes.

In Fig. 6 the simulation block diagram with DF scheme is shown. Generally data is compressed by convolution encoder before transmitting and using Viterbi algorithm to decode in both relay and destination nodes.

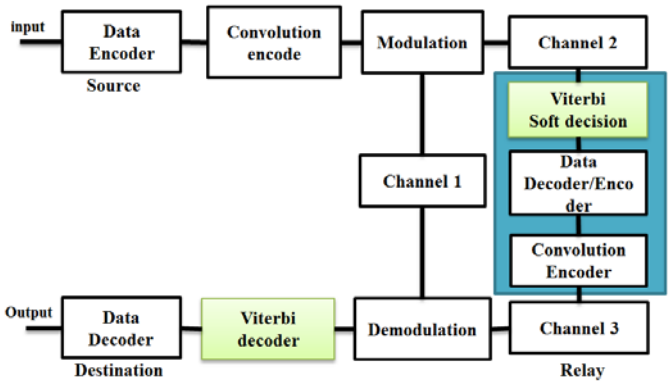

Fig. 6 the simulation block diagram soft decision on DF

The main ideal of this research is implement the soft decision using Viterbi decoder in relay after it receives data from source node. The soft decision is implemented with two decoding modules, the first module is provided in the relay node and the second module, SOVA, is implemented in destination node. The performance evaluation is simulated between source and destination nodes with the different schemes in Fig. 4-6.

In addition, there are two proposed structures of cooperative relay network. First structure is a delta structure that has all equal distances between source, relay and destination nodes. The second one is a line structure that the relay node is located between source and destination nodes. Both relay network structures are shown in Fig. 7.

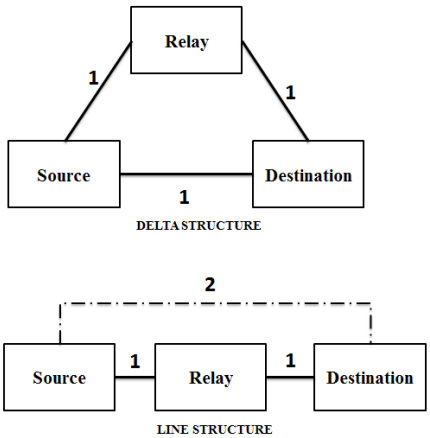

Fig. 7 two structures of cooperative relay network

IV. SIMULATION RESULT

The simulation is implemented by using MATLAB software modules which is in the reference from simulation of Cooperative Diversity in Wireless Networks [8]. The evaluation analysis is based on three cooperative schemes. The soft decision on DTC, RCPC and DF schemes is developed on exist algorithm. The simulation results presents by plotting bit error rate (BER) versus signal-to-noise ratio (SNR). The first evaluation is the plot of performance analysis of three cooperative schemes using AWGN and Rayleigh channel as shown in Fig. 8. The performance of DTC cooperative scheme is the best compare to the other two schemes which DF

scheme is the worst in both AWGN and Rayleigh channels. In AWGN channel, DTC scheme has gain approximately 3 dB from RCPC scheme and 10 dB from DF scheme at 10^{-4} BER. For Rayleigh channel, DTC scheme has gain about 7 dB from RCPC scheme at 10^{-3} BER.

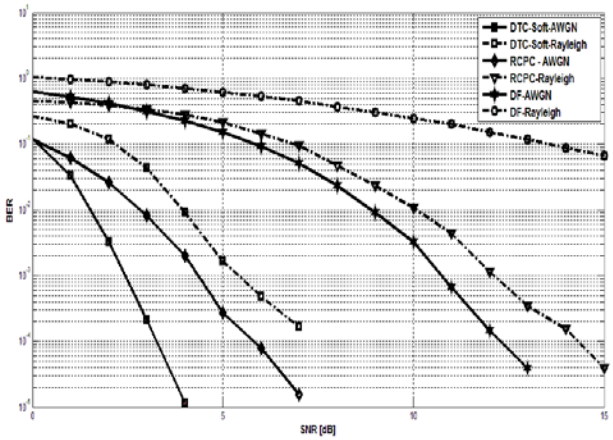

Fig. 8 BER of three cooperative schemes in AWGN and Rayleigh channels

In second plot shows the simulation results of performance analysis using both relay network structures, delta and line structures, and is shown in Fig. 9. Delta structure has gain approximately 13 dB in AWGN channel and 12 dB in Rayleigh channel at 10^{-3} BER.

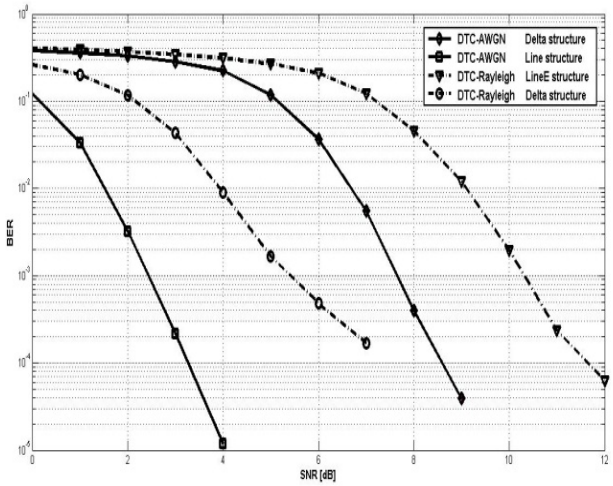

Fig. 9 BER of DTC scheme in AWGN and Rayleigh channels using delta and line structures

V. Conclusion

The performance analysis of soft decision decode combine with three schemes, DTC, RCPC, and DF, on cooperative relay environment is presented. The simulate results clearly show that DTC scheme give the best performance compared with conventional RCPC and DF schemes. The advantage of combining the incremental soft decision and turbo decoder is the success rate of decoding in relay with high efficiency and sufficient coding gain more than two other schemes. But this may introduce complexity and also delay time in the relay therefore it may be suitable to implement on the high performance hardware and the system which required higher reliability. This paper also is presented that the relay network structure which deploys relay is also important to get the improvement signal quality.

References

[1] M. Minelli, M. Coupechoux, J. Kelif, M. Ma and P. Godlewski "Relays-Enhanced LTE-Advanced Networks Performance Studies" *Sarnoff Symposium, 2011 34th IEEE*, May 2011.

[2] L. Chen*, R. A. Carrasco*, V. Ganepola*, S. Le Goff* and I. J. Wassell**,"Comparative Investigation of Coded Cooperative Communication Systems," *IEEE*,2008.

[3] J. Li, Z. Hu, and Y.Wang, "DF/AF cooperative relay in LTE-A,", *IEEE*,2010.

[4] S. Malik, S. Moon, B. Kim, D. No, SY. Kim, J. Lee, DJ. Kim, I. Hwang,"Smart Cooperative Relay Schemes in LTE-Advanced system," *ACM*,2012.

[5] W. Geng and T. Lv, "An Opportunistic Network Coding Cooperative Scheme for Wireless Uplink Multi-Relay Cooperative Networks,", *IEEE*,2012.

[6] A. Haghighat and A.Helmy, "Adaptive RCPC-based Cooperative Coding for Coordinated Multipoint Transmission", *IEEE*,2011.

[7] D. Ren, J. Ge, and X.Shi, "Novel Distributed Turbo Coding Scheme in Two-Hop Relay Networks," *IEEE*, 2012.

[8] A. Meier "Cooperative Diversity in Wireless Networks," http://andi.flowrider.ch/research/public/200403-cd.pdf.